Load Control Valves

BPF08-00/X.Y

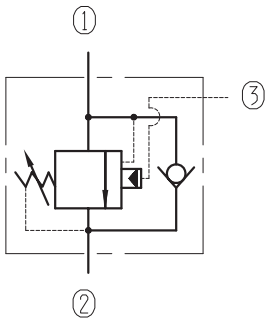

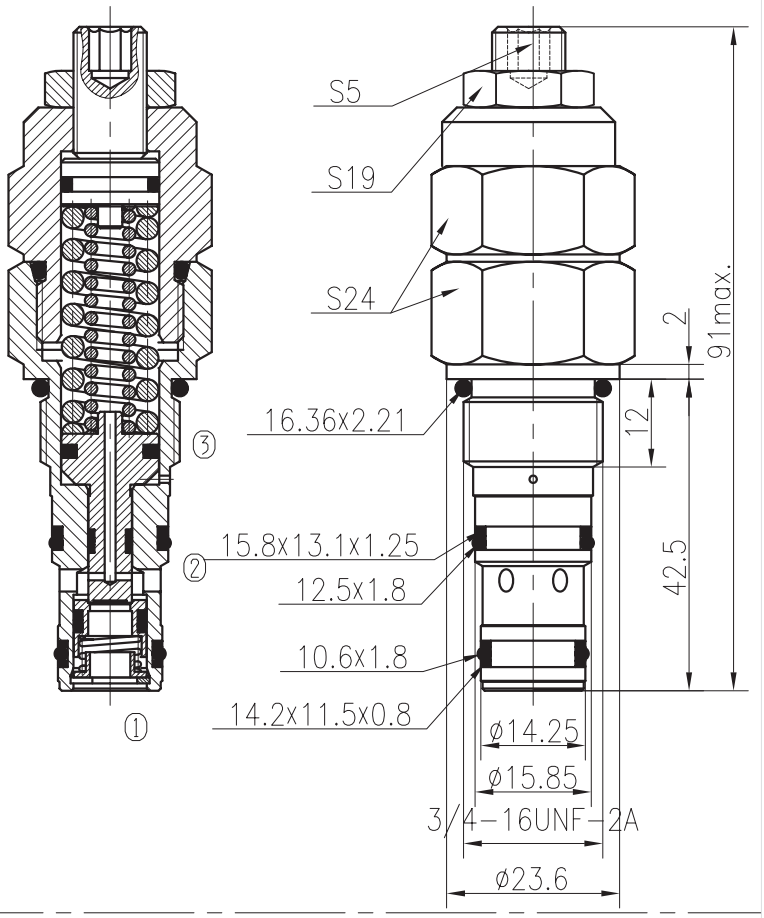

Specifications:

Max.Working Pressure :	270bar
Flow Max :	30L/min
Internal Leakage :	⩽0.4ml/min
Filtraion Of Oil :	25μm or better
Temperature :	-30~+100℃ (Standard Buna Seals)
Cavity :	T4-2
Installation torque :	24.5~27.2Nm
Pilot Ratio :	4.0:1

The valve controls moving load and preventing it from running ahead of the pump,locking the load in any position,it also provides static overload and thermal enpansion protection.

The valve allows free flow from ② to ① and blocks reverse flow until a pilot pressure proportional to the load pressure is sensed at ③ modulating flow from ①to② .

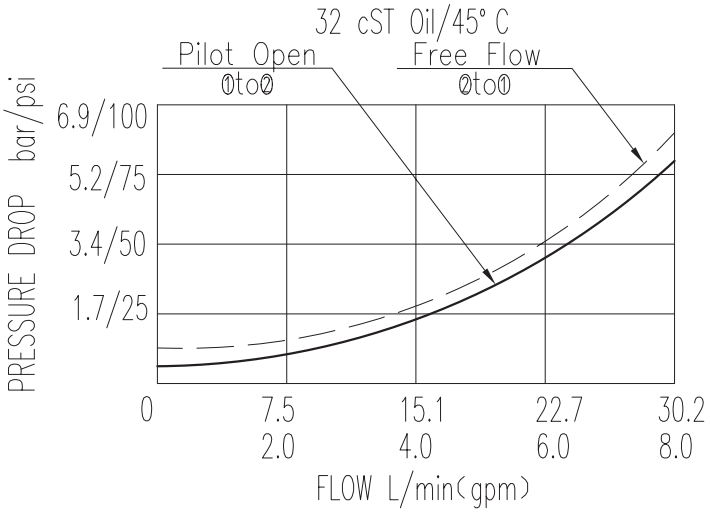

X	ADJUSTMENTS	
03	Leakproof hex. and socket screw	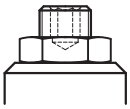

Y	SPRINGS			
	Press. range bar	Press. increase bar/turn	Standand setting bar	Cracking press. bar
05	70~350		210	180