Pilot-operated Check Relief Valves (Poppet-type)

BXDYF32-02/X.Y

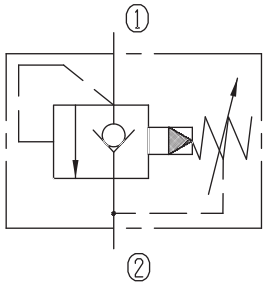

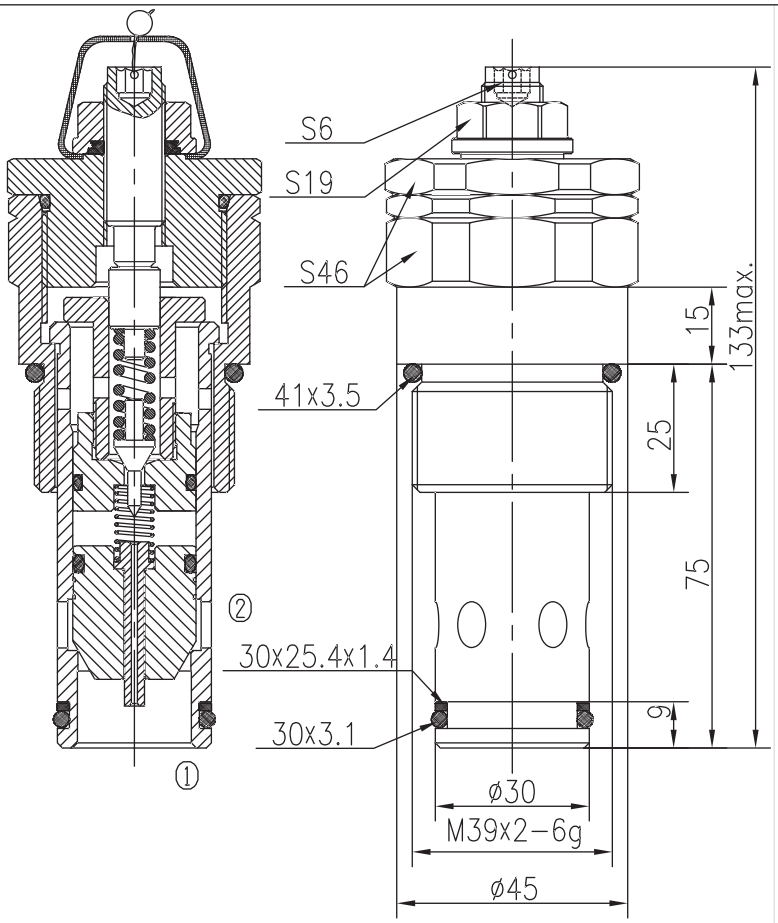

Specifications:

Max working Pressure :	315bar
Flow Max :	250L/min
Internal Leakage :	≤30ml/min
(80~90%of Setting Pressure at 30L/min)	
Filtraion Of Oil :	25μm or better
Temperature :	-30~+100℃ (Standard Buna Seals)
Cavity :	T-2415
Installation torque :	88.4~102Nm
Reverse Cracking Pressure :	2.5bar

The valve blocks flow from ① to ② until 90% pressure is present at ①.With the continued increase pressure on ①,① to ② began to overflow,until to the spring's maximum pressure.

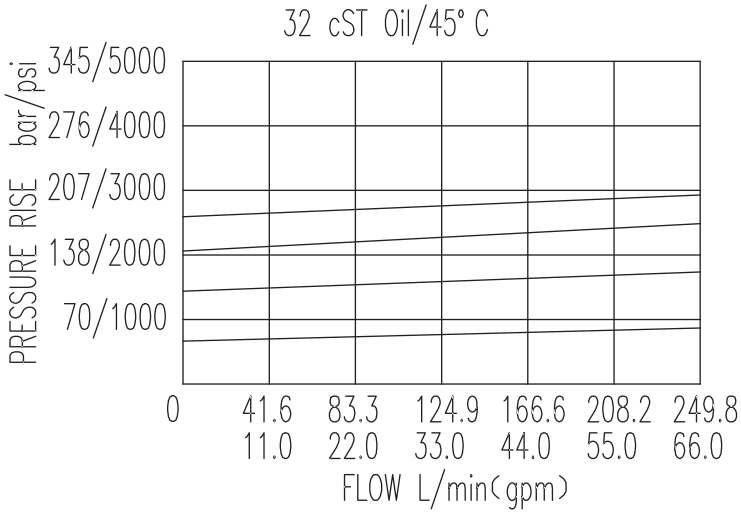

X	ADJUSTMENTS	
03	Looseproof hex. and socket screw	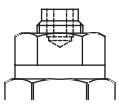
05	Factory Preset Lockwire Holse	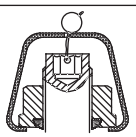

Y	SPRINGS			
	Press. range bar	Press. increase	Standard setting bar	Cracking press. bar
05	10~64	40	60	51
10	20~130	68	120	103
15	30~210	111	160	140

2.4.15